STARCONTROLS

Advanced DA RTU

Overview

Star Controls offers the latest in advanced security monitoring and control solutions that integrate seamlessly with Sierra Wireless products, providing cost effective, secure high-speed communications and simple monitoring solutions.

Advanced Distribution Automation RTU

MOTOROLA SOLUTIONS

Connect to or operate as:

- Switch RTU
- Feeder RTU
- Capacitor Bank
- General RTU

Local Control and Monitoring Features:

- Real-time data monitoring
- Historical data storage
- Advanced programming capabilities
- Connectivity to multiple IEDs
- Optional touch-screen interface

Local Connectivity:

- DNP3.0/MODBUS master or slave to Serial/Ethernet devices
- Local Touchscreen

Communication Protocols , Cyber Security and Interfaces:

- DNP3.0 Master/Slave, Motorola MDLC protocol
- Full-fledged (end-to-end) Cyber Security
- Cellular networks
- Private/Public Wireless Radio networks; Conventional, P-25 and Analog Trunking
- Fiber Optics, PLCC and Line
- LAN/WAN

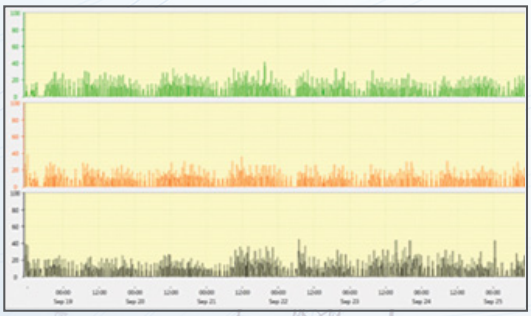

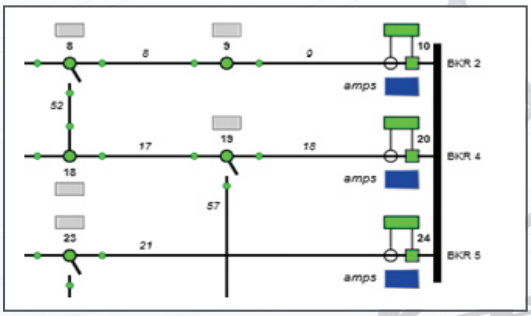

I/O & Data Maintenance Statistics

StaRTU® maintains diagnostics for all I/O points monitored. These diagnostics include daily and monthly counters, max and mins, and other information. The statistics can be viewed with standard toolbox software and are instrumental in system troubleshooting.

Cellular Modem Diagnostics

StaRTU® polls the Cellular modem for diagnostics such as RSSI and Data Usage.

Flash Data Storage

StaRTU® saves data in local flash memory, and restores it following power-loss and/or new application download. This feature virtually eliminates the risk of losing RTU data.

Hassle Free Upgrade

New **StaRTU** firmware releases are fully compatible with existing programs. When new features are released, users need only download the new C file into the RTU, and it is fully compatible with the existing application, including any changes made to the user process.

Simplicity

A typical **StaRTU®** system consists of a single site configuration, a ladder (C) application, and then small site-specific customization text files. The user does not need to define the I/O modules, as the system can determine what is physically installed. There is no need for users to link and compile different configurations and files! **StaRTU®** provides essential inventory and version control reporting features. The RTU firmware version, RTU type, I/O module configuration, and other information are reported directly to SCADA. This feature enables convenient tracking of system and software changes, as well as serves as a helpful asset management tool.

STARCONTROLS
Your Global SCADA & Telecommunications Partner

© Star Controls, Inc. All rights reserved.
StaRTU® a registered trademark of Star Controls, Inc.
v0116

Tel: 1 + 954.603.0491
Fax: 1 + 954.603.0492
sales@star-controls.com

www.STAR-CONTROLS.com

11555 Heron Bay Blvd, Suite #200
Coral Springs, Florida 33076 USA